Management System
ISO 9001:2015

www.tuv.com
ID 9105017955

TRIANGLE WATERQUIP

ITC DOSING PUMPS

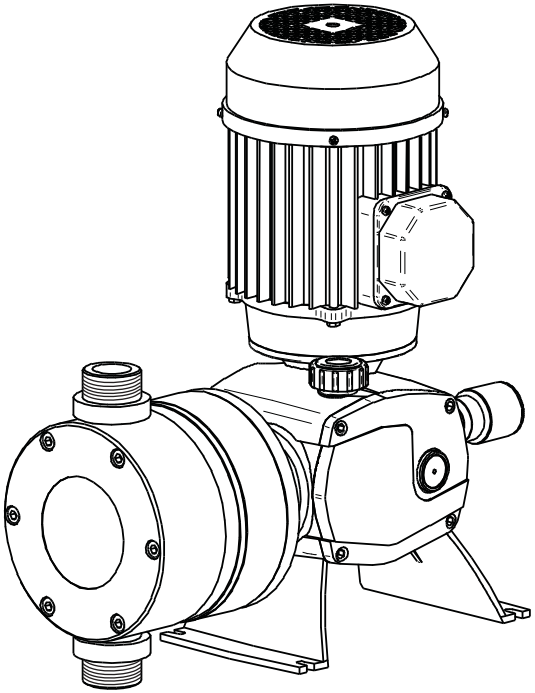

DOSTEC-50

ENGLISH

SAFETY RULES

To avoid personal or enviromental damages and to guarantee a proper operation of the equipment, the staff in charge of the installation, set up and maintenance of the equipment must follow the instructions of this manual, specially those recommendations and warnings explicitly detailed. In addition, specific instructions for the chemical products to be dosed should be followed.

INDEX

1.-GENERAL DESCRIPTION 4

2.-UNPACKING AND STORAGE 5

3.-TECHNICAL FEATURES 6

4.-OPERATION 9

5.- INSTALLATION
- General considerations 10
- Electric connection 11
- Hydraulic installation 12

6.- START UP 14

7.- MAINTENANCE
- Parts list Dostec piston 16
- Parts list Dostec diaphragm 20
- Periodical maintenance 24
- Problems: causes and solutions 25

CE APPROVAL DECLARATION 26

WARRANTY 26

1.- GENERAL DESCRIPTION

DOSTEC-50 dosing pumps are heavy duty, high precission, piston pumps for dosing liquid products.

This series allows many injection possibilities depending on the head being chosen. The available heads are from 330 to 1200 l/h for the piston series, and from 207 to 1080 l/h for the diaphragm series.

DOSTEC-50 dosing pumps are manufactured with materials that can resist most chemicals products, even acids. They are designed for all sorts of processes where it is necessary to dose a product into a hydraulic network, such as: food, textile, chemical industry, water treatments, etc. (See materials in Technical Features). In case there is any doubt about compatibility of materials with the products to be used please contact ITC S.L. Technical Service.

Dosing flow of each module is adjustable independently with no need to stop the pump from 0% to 100% of its capacity.

It is made up as follows:

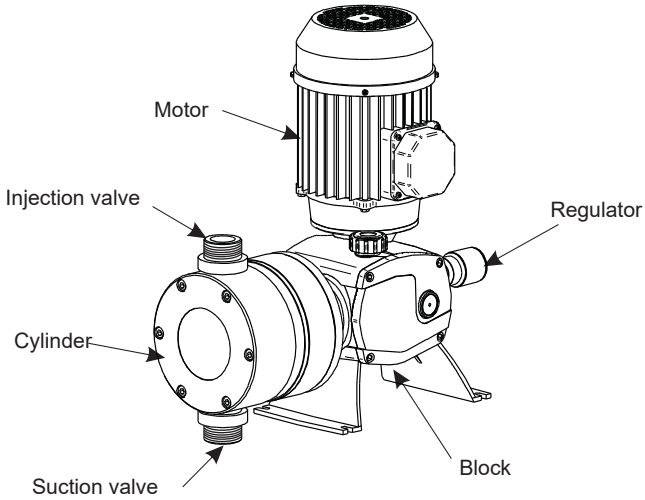

Code formulation

MOTOR	HEAD	FREQUENCY	STROKE
L: 3ph. 50/60Hz 230/400V **M**: 1ph. 50Hz 230V	**P :** Piston **D** : Diaphragm	**3**: 60 Stroke/min. **4**: 120 Stroke/min. **5**: 144 Stroke/min.	**1** : 5 mm **2** : 7,5 mm **3** : 10 mm **4** : 15 mm

71 - L P 43 - P77 P B X

INJECCION DIAMETER	MATERIAL Cylinder - Piston/ Membrane	VALVE Body - Ball	CONNECTION
P77: Ø 77 mm Piston **P95**: Ø 95 mm Piston **P110**: Ø 110 mm Piston **D142:** Ø 142 mm Diaphragm **D163**: Ø 163 mm Diaphragm	**P:** PP - PEUHMW/PTFE **I** :AISI316- AISI316/PTFE **F**: PVDF - ---- / PTFE **T:** PTFE - ---- / PTFE **A**: PP - AISI316 / ----	**P:** PP - Soda. **B**: PP - Boro. **I**: SS 316 **F**: PVDF - Boro. **T**: PTFE - Boro.	**X:** 1”1/4 **Y:** 1”1/4 NPT

2.- UNPACKING AND STORAGE

The original packing is prepared so that carriage and storing of the product do not cause any damage to the product, as long as this is done far from heat sources and in dry, ventilated spaces.

Inside packing we include:

- DOSTEC-50 dosing pump
- Handbook
- Oil (700cm^3)

3.- TECHNICAL FEATURES

	CODE	FLOW 50Hz		FLOW 60Hz		PRESSURE		**Suction lift	
		l/h	GPH	l/h	GPH	bar	PSI	m	ft
Piston	**71-LP33-P77**	167	44	200	53	12	174	9	30
	71-LP34-P77	250	66	300	79	12	174	9	30
	71-LP33-P110	330	87	400	106	5,5	80	7	23
	71-LP43-P77	330	87	400	106	12	174	9	30
	71-LP34-P95	375	100	450	119	7,5	109	9	30
	***71-LP53-P77**	400	106	-	-	12	174	9	30
	71-LP34-P110	500	132	600	159	5,5	80	7	23
	71-LP44-P77	500	132	600	159	11	160	9	30
	***71-LP54-P77**	600	159	-	-	9	131	9	30
	71-LP44-P95	750	198	900	238	7,5	109	8	26
	***71-LP54-P95**	900	238	-	-	6	87	7	23
	71-LP44-P110	1000	264	1200	317	5,5	80	5	16
	***71-LP54-P110**	1200	317	-	-	4,5	65	3	10
Diaphragm	**71-LD31-D142**	104-134	27-35	124-160	33-42	10	145	9	30
	71-LD32-D142	156-201	41-53	186-241	49-64	10	145	9	30
	71-LD33-D142	207-267	55-71	249-321	66-85	10	145	9	30
	***71-LD51-D142**	249-321	66-85	-	-	10	145	9	30
	71-LD33-D163	260-342	69-90	312-411	82-109	7	102	8	26
	71-LD42-D142	311-401	82-106	373-481	99-127	10	145	9	30
	71-LD43-D142	415-535	110-141	498-642	132-170	10	145	8	26
	71-LD34-D163	435-522	115-138	522-627	138-166	5	73	8	26
	***71-LD53-D142**	510-642	135-170	-	-	9	131	8	26
	71-LD43-D163	520-685	137-181	624-822	165-217	7	102	7	23
	***71-LD53-D163**	648-822	171-217	-	-	6	87	5	16
	71-LD44-D163	870-1045	230-276	1044-1254	276-331	5	73	4	13
	***71-LD54-D163**	1080-1254	285-331	-	-	4	58	2	6

*Can not work at 60Hz

** Suction lift when dosing head an suction pipe are full. Tested with water at 20ºC

ELECTRIC CURRENT: As specified in the motor plate
POWER: 0.74 KW (1 Hp)
PROTECTION : IP-55

MATERIALS:	PISTON:	PEUHMW / PVDF / SS 316
	DIAPHRAGM:	Elastomer base reinforced with fiber and P.T.F.E clothing
	RETENTION:	FPM
	CYLINDER:	P.P. / PVDF / SS 316
	VALVE(body):	P.P / PVDF / SS 316
	VALVE(ball) :	glass / glass borosilicate / SS 316

AMBIENT TEMPERATURE: 0 ... 45 ºC

MEDIA TEMPERATURE: PP: 0 ... 50 ºC
PVDF: -10 ... 50 ºC
SS: -10 ... 60 ºC

RELATIVE HUMIDITY MAX.: 95% (without Condensation)
NOISE LEVEL dB(A): minor than 70
WEIGH: 21 Kg (46 lb)

DIMENSIONS

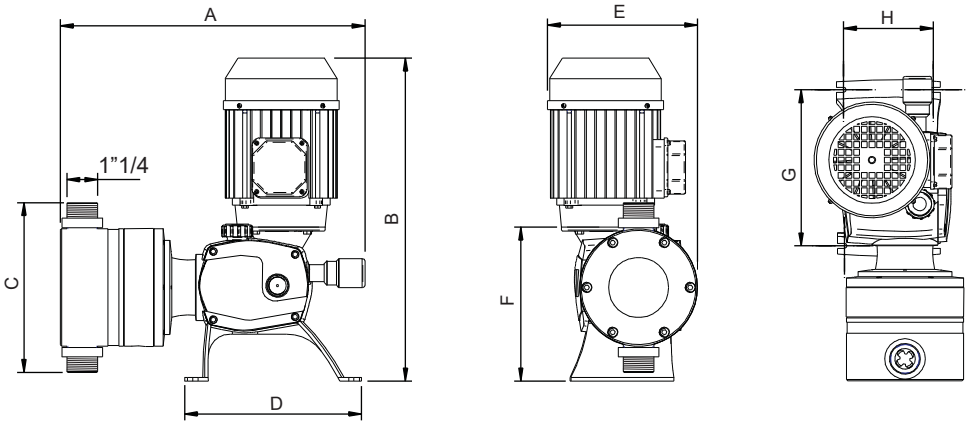

Piston	A	B	C	D	E	F	G	H	
	415	460	230	241	204	210	212	122	mm
	16.3	18	9	9.5	8	8.2	8.3	4.8	in

Diaphragm		A	B	C	D	E	F	G	H	
	D163	392	440	270	241	224	210	212	122	mm
		15.4	17.3	10.6	9.5	8.8	8.2	8.3	4.8	in
	D142	392	440	250	241	214	210	212	122	mm
		15.4	17.3	9.8	9.5	8.4	8.2	8.3	4.8	in

FLOW - PRESSURE GRAPHICS

71-.....-..... Code

60Hz

50Hz

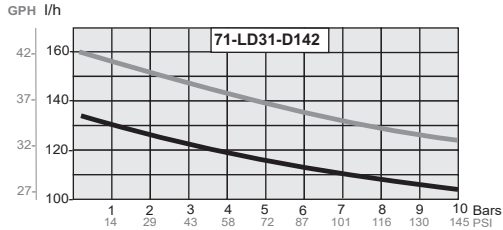

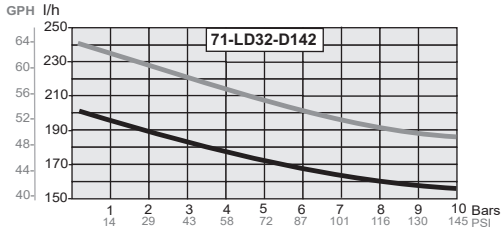

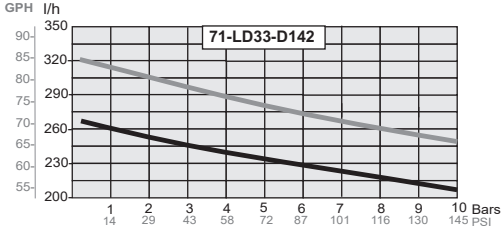

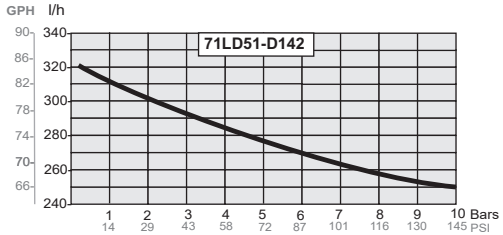

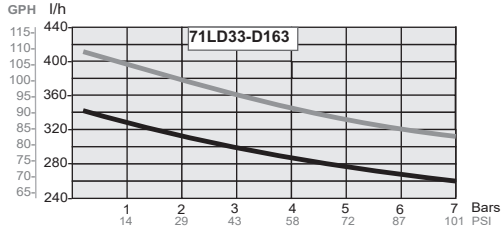

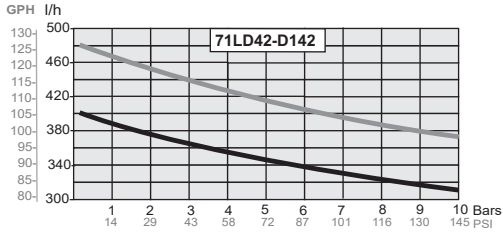

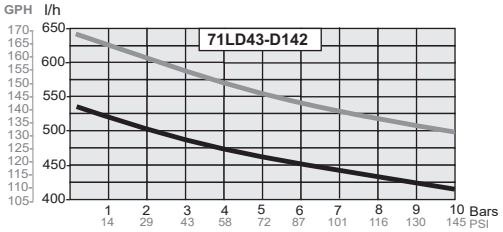

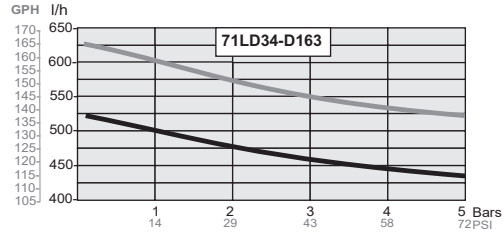

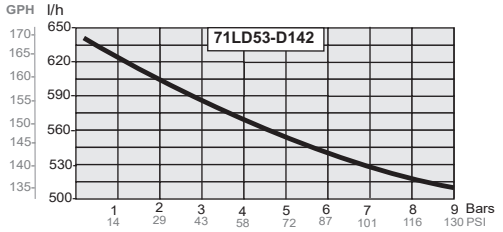

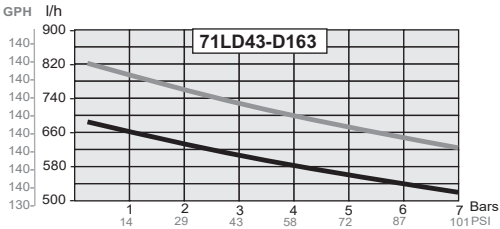

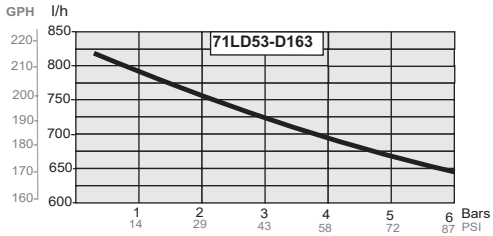

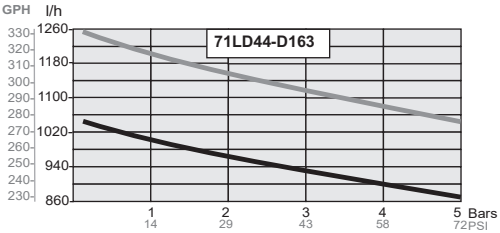

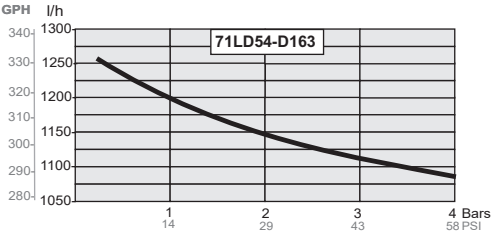

4.- OPERATION

The rotational motion of the motor is transmitted by the gear box that consists of two major components, the pinion **(A)** and the ring gear **(B)**. The pinion and the ring gear are linked to an axis with an eccentric bearing **(C)** that pushes the shaft **(D)** which is threaded to the diaphragm or the piston **(E).** The return movement is made by the spring **(F)**.

While the pump is running the stroke length can be regulated by the flow regulator knob **(G)**. It increase or reduce the discharge or suction's strokes, either the piston or the diaphragm, changing the injection flow. The dosing flow can be adjusted between 0% and 100%.

The flow can be adjustable through an inverter, which will vary the engine speed of the pump and will allow regulate the dosing flow between 10% and 100%.

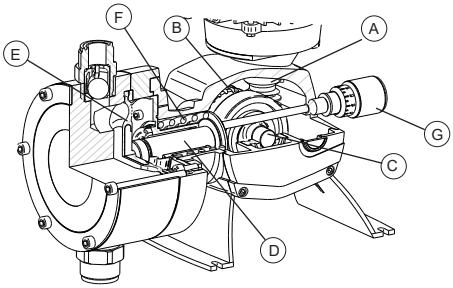

5.- INSTALLATION

GENERALITIES

To install this pump it is advisable to choose places protected from water, away from heat sources and with air renewal.

Place the pump vertically over a totally rigid surface to achieve a proper lubrication of all inner elements. Anticipate which will be the room you will need to comfortably do the basic maintenance and install / desinstall the pump.

Fix the pump on the chosen flat surface by means of 4 screws.

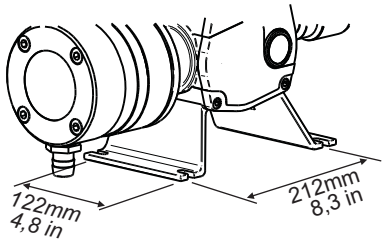

BLOCK

Pull out the oil cap for transport , fill the pump with the SAE oil 80W90 being supplied (or similar oil), up to the level shown on the screen and put on the working cap (black with a hole).

Approximate oil contents 650 cm^3

Oil list:

CEPSA SAE80W90
REPSOL EP 80W/90
SHELL SPIRLAXHD OIL 80W/90
ESSO GEAR OIL 80W/90
AGIP ROTRA MP 80W-90
MOBILUDE HD 80W-90
BP ENERGEAR HT 80W-90
CATROL HYPOYC
GULF GEAR MP SAE 80W 90
ELF TRANSGEAR HD 80W-90

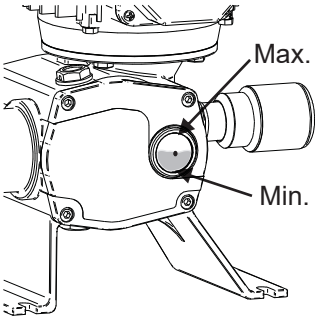

ELECTRICAL CONNECTION

The electric protection of the motor must be installed and adjusted following its nominal instensity (overloaded switch disjuntor). (See wiring).

A disconnection dispositive must be installed in case of emergency.

The equipment must be protected to avoid untimely sudden starts.

THREE-PHASE CONNECTION (50/60 Hz)

To work at 230V(50Hz)/265V(60Hz) plug the motor in triangle. Install a protection.
To work at 400V(50Hz)/460V(60Hz) use a star connection. Install a protection.
Electrical cable AWG14-10.

△ 230V (50Hz)
265V (60Hz)

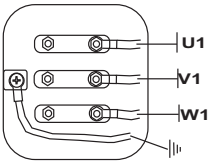

3,4 Amp

⅄ 400V (50Hz)
460V (60Hz)

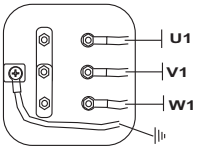

2 Amp

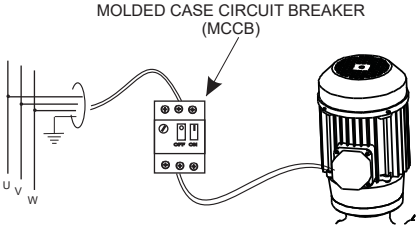

Wiring with Thermal Protection

K, Electromagnetic switch
D, Motor
U, Superheat protection, relay GRB
Ta, Switch OFF button
Qa, Switch ON button
H, Trouble lamp

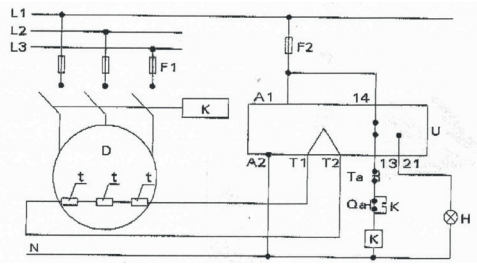

SINGLE PHASE CONNECTION

To work at 230 V single-phase at 50 Hz we will connect directly the motor wire to the adequate protection. To work at 60 Hz we will connect the connection box plates as shown in the drawing.

230 VAC (50 Hz)

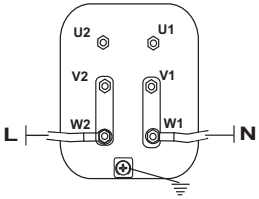

5,3 Amp.

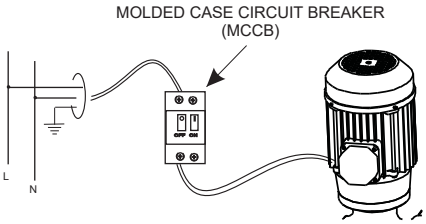

HYDRAULIC INSTALLATION

Installation examples

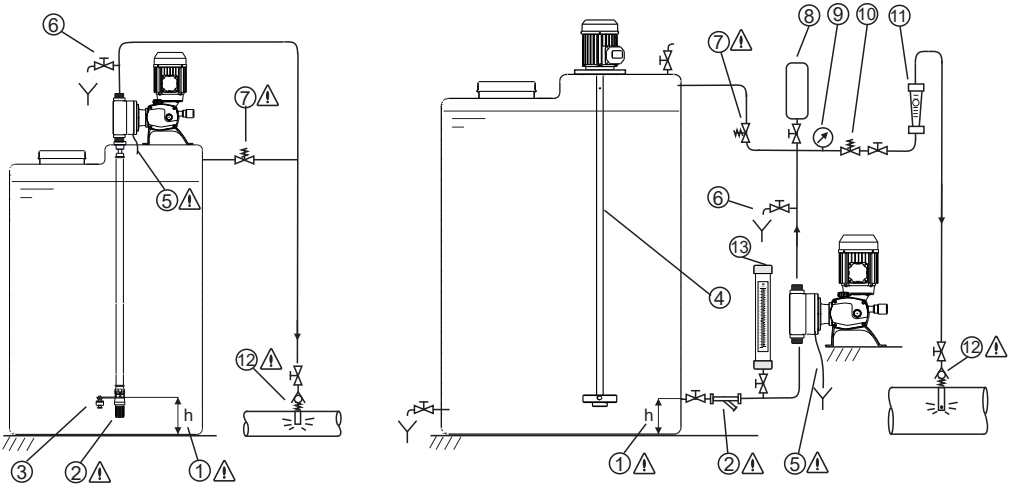

⚠ ① Avoid suctioning the undiluted particles from the bottom of the tank.
⚠ ② Filter. It is important to install a filter (150 micron) in the suction pipe.
③ Level sensor
④ Agitator
⚠ ⑤ Make sure to collect any liquid leakage from the cylinder's vent/drain hole in a proper container.
⑥ Prime valve / drain valve
⚠ ⑦ Safety relief valve.Install a safety valve in a derivation as near as possible from the pump, in order to protect it and the whole installation from possible over-pressures. This derivation must derive liquid to a safe place.
⑧ Pulsation dampener
⑨ Pressure gauge
⑩ Pressure regulating valve
⑪ Flowmeter
⚠ ⑫ Injection check valve
⑬ Calibration cylinder

Recomendations for correct installation

SUCTION PIPE

⚠ Long suction pipe: L>2m (6.5ft)

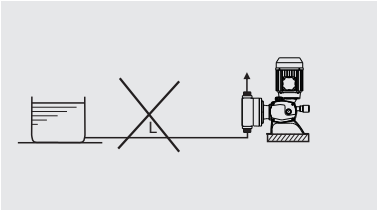

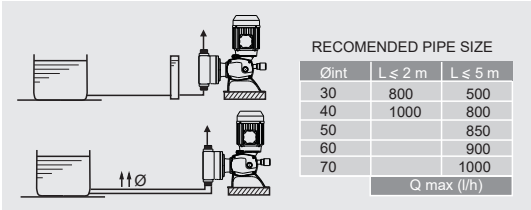

RECOMENDED PIPE SIZE

Øint	L ≤ 2 m	L ≤ 5 m
30	800	500
40	1000	800
50		850
60		900
70		1000
	Q max (l/h)	

⚠ Air in sutcion pipe

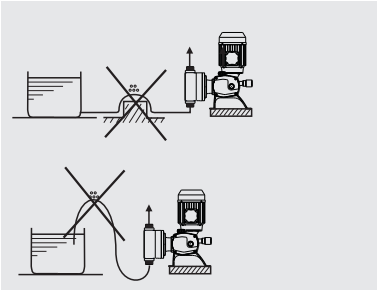

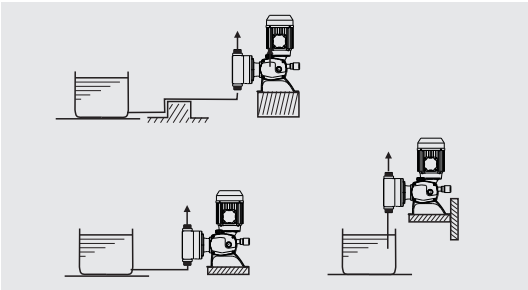

DISCHARGE PIPE

⚠ Long discharge pipe: L>5m (16 ft)

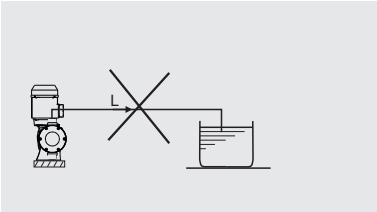

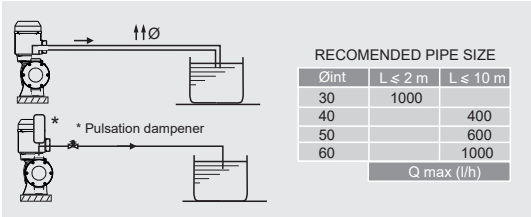

RECOMENDED PIPE SIZE

Øint	L ≤ 2 m	L ≤ 10 m
30	1000	
40		400
50		600
60		1000
	Q max (l/h)	

⚠ Siphon

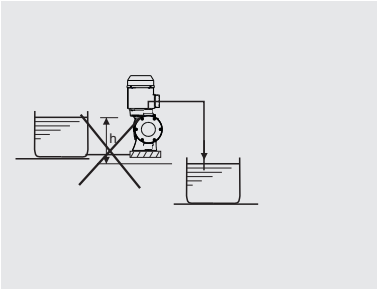

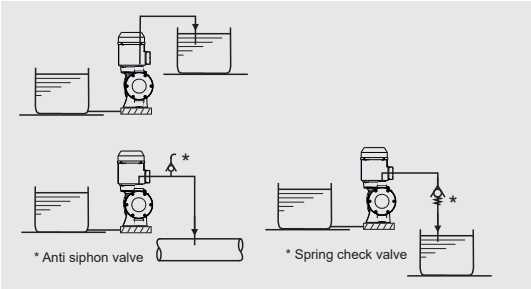

6.- START UP AND REGULATION

STAND: Check that the pump is properly installed in its stand.

OIL: Take off re-filling lid and fill the pump with the provided oil:
SAE 80 W 90 or equivalent.
Check the oil level shown on the oil peep hole

Lubricants list:
CEPSA SAE 80W 90
REPSOL EP 80W/90
SHELL SPIRLAX HD OIL 80W/90
ESSO GEAR OIL 80W/90
AGIP ROTRA MP 80W-90
MOBILUDE HD 80W-90
BP ENERGEAR HT 80W-90
CASTROL HYPOYC
GULF GEAR MP SAE 80W 90
ELF TRANSGEAR HD 80W-90

CHECKING THE HYDRAULIC CIRCUIT: Check that all valves are opened and that escapes from priming valves derive the liquid to a proper receptacle.

ROTARY DIRECTION: Start up the pump to check that the rotary direction coincides with the one shown by the arrow. To change rotary direction invert two phases in the motor terminals box.

CHECKING OF PUMP: Check visually/auditorilly the proper working of the pump.

DOSING FLOW

Through the micrometic regulator ,we will adjust the dosing flow from 0 to 100% depending on the wished value. It is not advisable a regulation under 10%.

In order to check the dosing flow:

1.- Prime the pump immersing the suction pipe in a graduated receptacle (A).

2.- Mark in the receptacle the liquid level.

3.- Start up the pump and pour a known volume (V) of measured liquid in a second receptacle (B).

4.- Measure the time (t) that goes between the start up of the pump and the precise instant in which the liquid reaches the level of the mark receptacle A.

5.- The dosed flows corresponds to:

Q(l/h) = V (liters) / t (seconds) x 3600

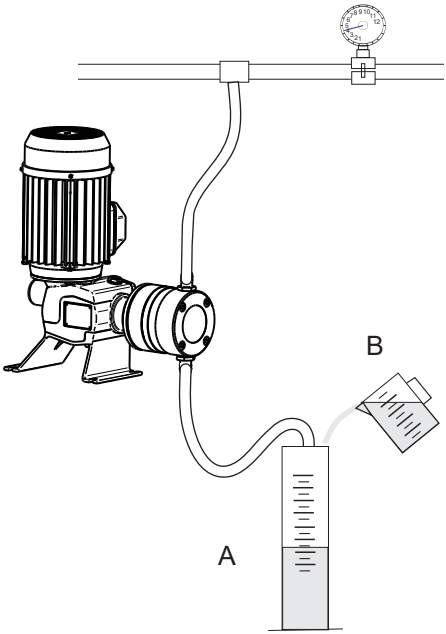

DOSTEC-50 Piston

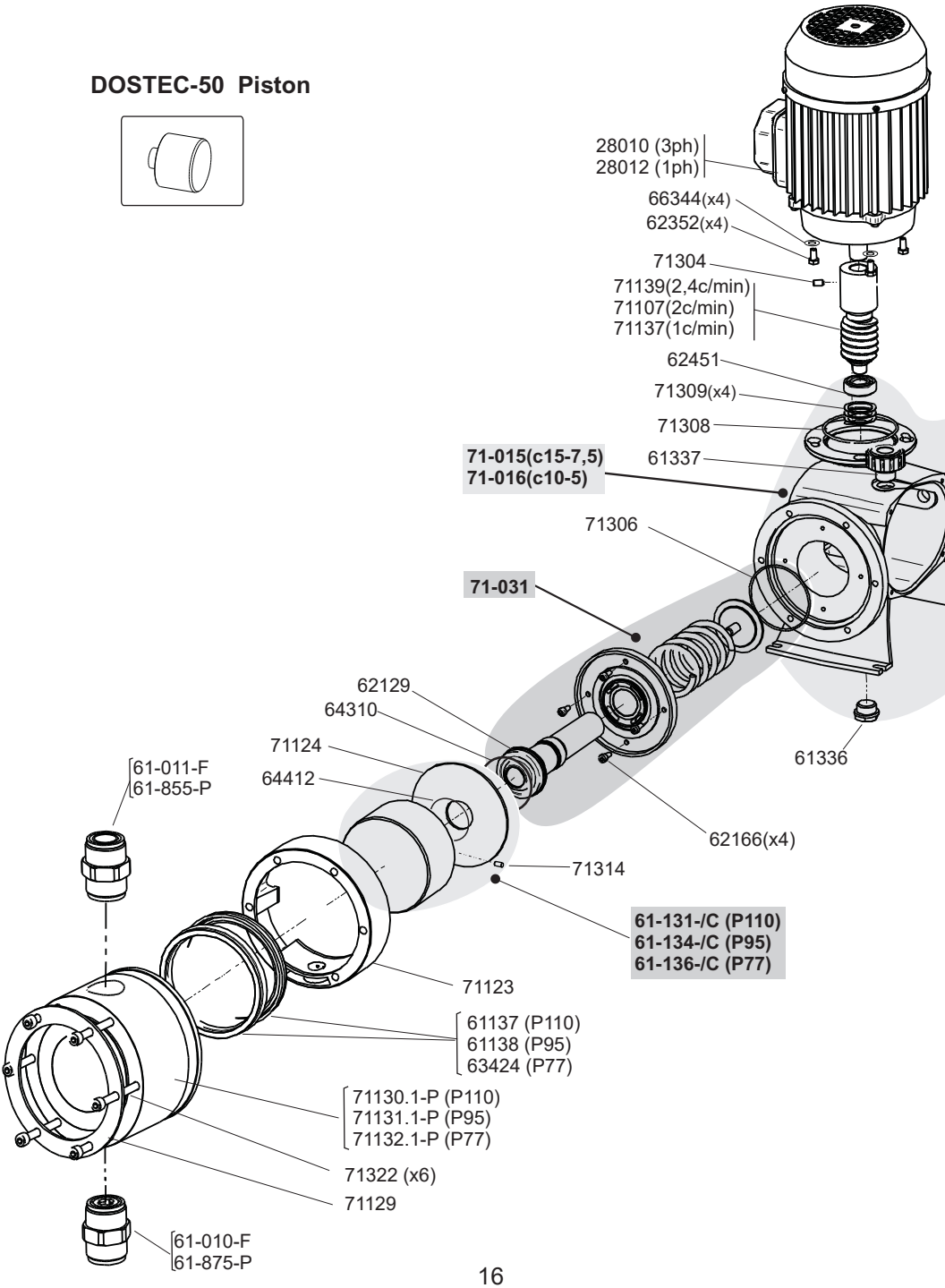

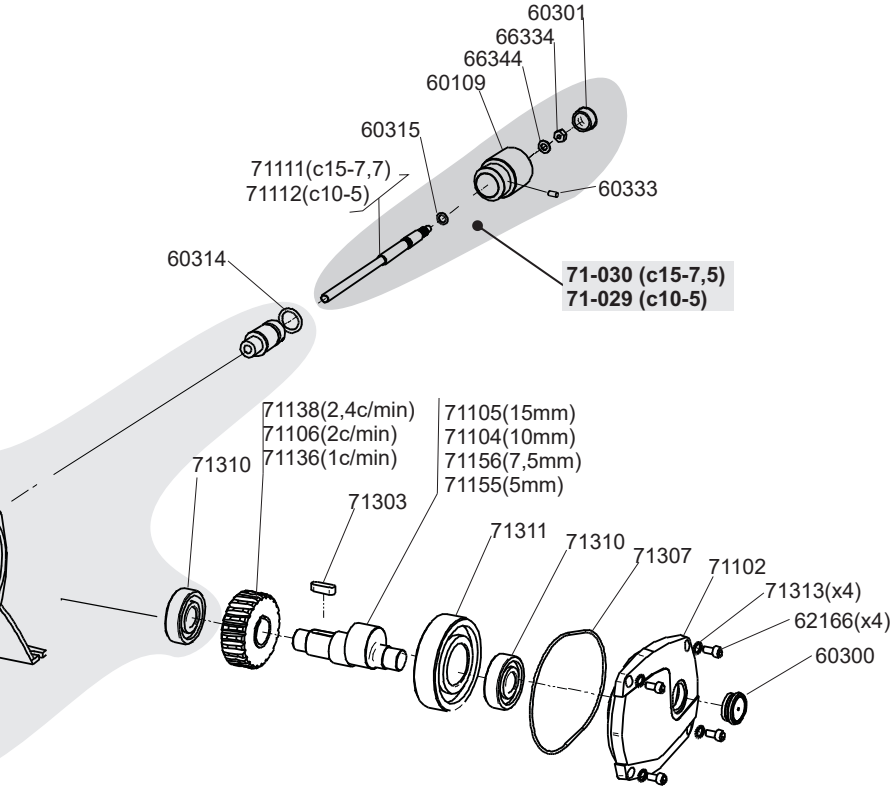
60301
66334
66344
60109
60315
71111(c15-7,7)
71112(c10-5)
60333
60314
71-030 (c15-7,5)
71-029 (c10-5)
71138(2,4c/min)
71106(2c/min)
71136(1c/min)
71105(15mm)
71104(10mm)
71156(7,5mm)
71155(5mm)
71310
71303
71311
71310
71307
71102
71313(x4)
62166(x4)
60300

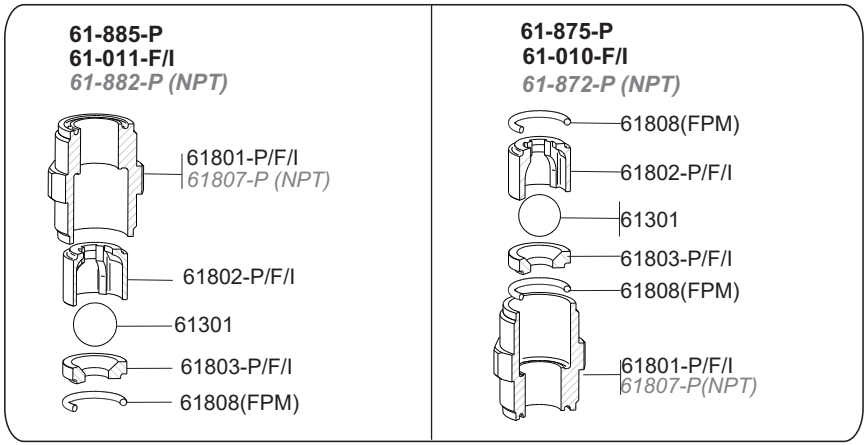
61-885-P
61-011-F/I
61-882-P (NPT)
61801-P/F/I
61807-P (NPT)
61802-P/F/I
61301
61803-P/F/I
61808(FPM)
61-875-P
61-010-F/I
61-872-P (NPT)
61808(FPM)
61802-P/F/I
61301
61803-P/F/I
61808(FPM)
61801-P/F/I
61807-P(NPT)

LIST OF PARTS DOSTEC-50 (Piston)

CODE	DESCRIPTION	UNITS
28010	Electric motor 750w (1cv) 3ph T80 B14 230/400	1
28012	Electric motor 750w (1cv) 1ph 50hz T80 B14 high torque	1
60109	Regulator knob Dostec	1
60300	Oil peep hole	1
60301	Regulator knob plug	1
60314	O-ring 17x3,5 NBR	1
60315	O-ring 6,5x2 NBR	1
60333	Screw M4x8 DIN 913 A-2	1
61-131/-C	Piston 1000 l/h D110 lock EF	1
61-134/-C	Piston 750 l/h D95 lock EF	1
61-136/-C	Piston 500 l/h D77 lock EF	1
61137	Seal 1000 l/h FPM	2
61138	Seal 750 l/h FPM	2
61336	Drain plug ½	1
61337	Filler plug ½”	1
62129	Bellow FPM	1
62166	Screw M6x16 Din 912 A2	8
62352	Screw M6x12 Din 933 A2	4
62451	Bearing 6202 zz	1
63424	Seal 78x87x6 FPM 500 l/h	2
64310	O-ring 55,5x3,5 NBR	1
64412	O-ring 44x2 FPM	1
66334	Nut M6 Din 934 A2	1
66344	Washer D6 Din 125 A2	5
71102	Block lid D50	1
71104	Eccentric shaft 10mm	1
71105	Eccentric shaft 15mm	1
71106	Ring gear 2 stroke D50	1
71107	Pinion 2 stroke D50	1
71111	Regulation rod p1,5mm D50	1
71112	Regulation rod p1 mm D50	1
71123	Cylinder spacer D50	1
71124	Protection disc D50	1
71129	Ring plate for piston cylinder	1
71130.1-P	Cylinder 1000 l/h s ring plate PP	1
71131.1-P	Cylinder 750 l/h s ring plate PP	1
71132.1-P	Cylinder 500 l/h s ring plate PP	1
71136	Ring gear 1 stroke D50	1
71137	Pinion 1 stroke D50	1
71138	Ring gear 2,4 stroke D50	1
71139	Pinion 2,4strokes D50	1
71155	Eccentric shaft 5 D50	1
71156	Eccentric shaft 7,5 D50	1
71129	Ring plate for piston cylinder D160	1
71303	Wedging piece Din 6885-a (8x7x25)	1
71304	Screw M6x10 Din 913 8.8	1
71306	O-ring 70 x 2,5 NBR	1
71307	O-ring 125x2,5 NBR	1

71308	O-ring 77 x 2 NBR	1
71309	Elastic washer Din137-b (34x26x0,4)	3
71310	Bearing 6304zz (20x52x15)	2
71311	Bearing 6308zz (40x90x23)	1
71313	washer M6 Nord-lock	4
71314	Screw M5x12 DIN914 A2	1
71322	Tornillo M8x150 DIN912 A2	6

ASSEMBLIES

71-015	Block D50 p1.5mm assembly	1
71-016	Block D50 p1mm assembly	1
71-029	Regulator p 1mm D50 assembly	1
71-030	Regulator p 1,5 mm D50 assembly	1
71-031	Rod slider D50-P assembly	1

VALVES

61-010-P/F/I	Suction check valve 1 1/4	1
61-011-P/F/I	Discharge check valve 1 1/4	1
61-875-P/	Suction check valve 1 1/4 PP Borosilicate	1
61-885-P	Discharge check valve 1 1/4 PP Borosilicate	1

MAINTENACE KIT (valves+seals+bellow)

71-071-P	Maintenance kit Dostec-50 P77 PP	1
71-072-P	Maintenance kit Dostec-50 P95 PP	1
71-073-P	Maintenance kit Dostec-50 P110 PP	1

Materials code: -P= Polypropylene
-F= PVDF
-I= SS 316
-C= ceramic

DOSTEC-50

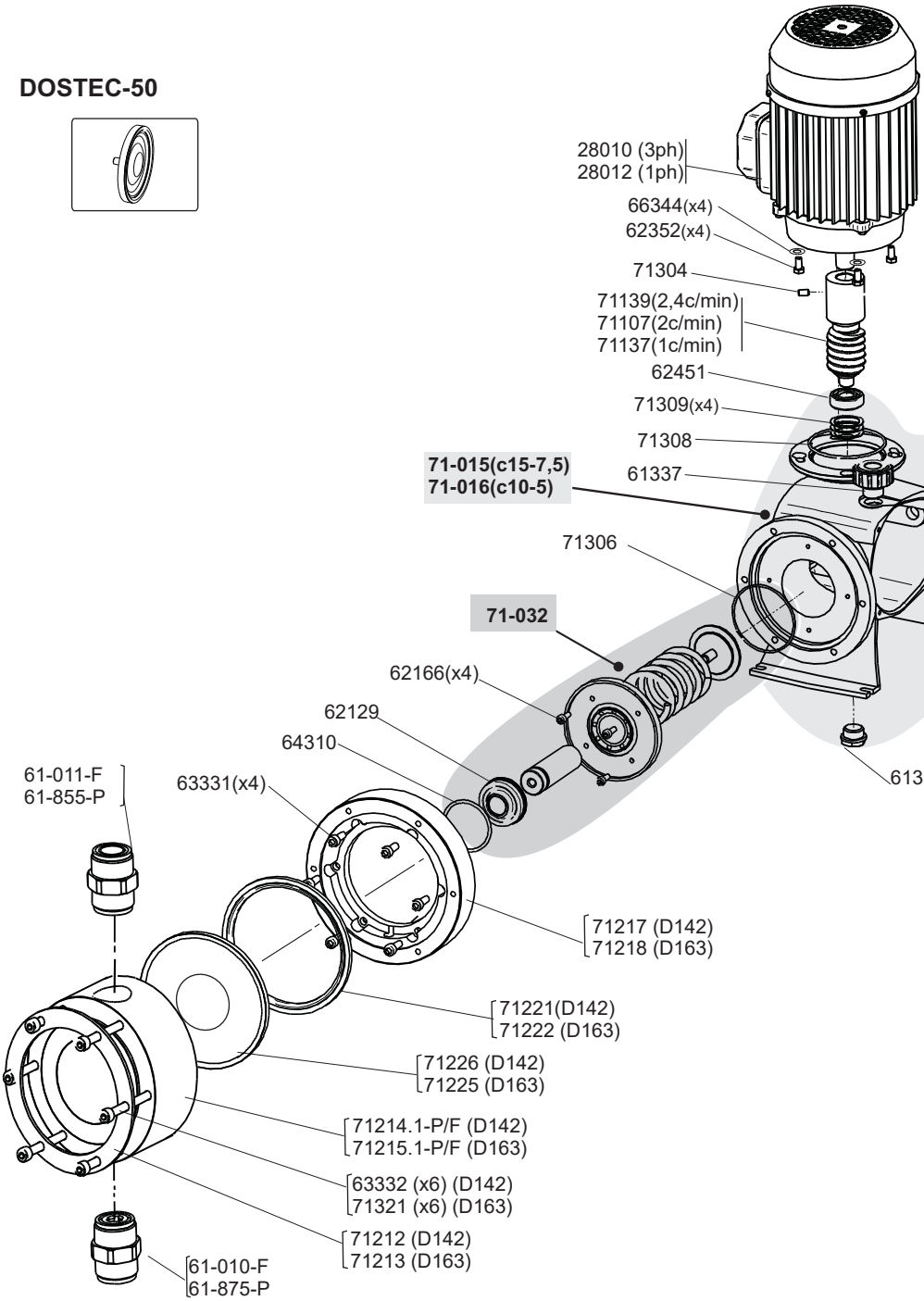
28010 (3ph)
28012 (1ph)
66344(x4)
62352(x4)
71304
71139(2,4c/min)
71107(2c/min)
71137(1c/min)
62451
71309(x4)
71308
71-015(c15-7,5)
71-016(c10-5)
61337
71306
71-032
62166(x4)
62129
64310
613
61-011-F
61-855-P
63331(x4)
71217 (D142)
71218 (D163)
71221(D142)
71222 (D163)
71226 (D142)
71225 (D163)
71214.1-P/F (D142)
71215.1-P/F (D163)
63332 (x6) (D142)
71321 (x6) (D163)
71212 (D142)
71213 (D163)
61-010-F
61-875-P

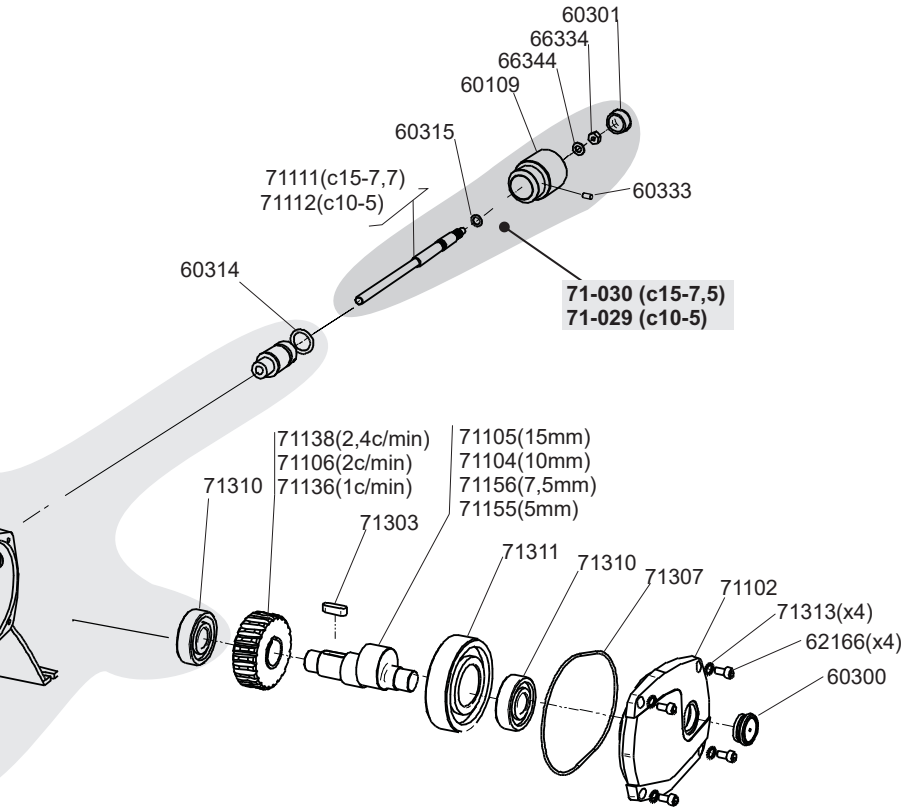
60301
66334
66344
60109
60315
71111(c15-7,7)
71112(c10-5)
60333
60314
71-030 (c15-7,5)
71-029 (c10-5)
71138(2,4c/min)
71106(2c/min)
71136(1c/min)
71105(15mm)
71104(10mm)
71156(7,5mm)
71155(5mm)
71310
71303
71311
71310
71307
71102
71313(x4)
62166(x4)
60300

36

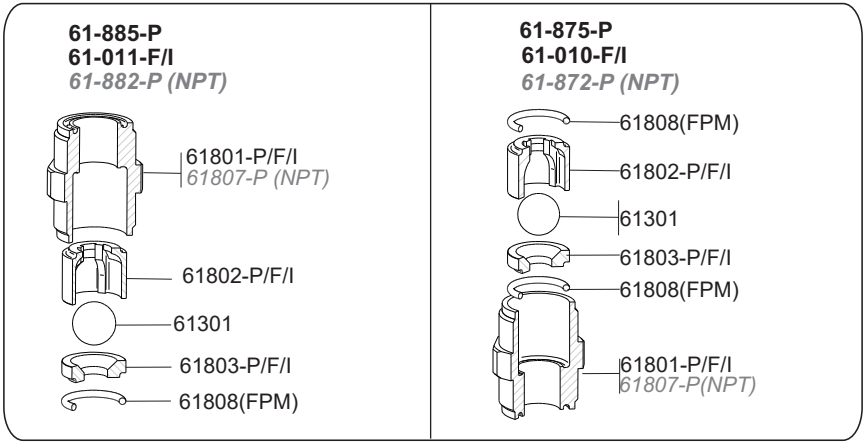
61-885-P
61-011-F/I
61-882-P (NPT)
61801-P/F/I
61807-P (NPT)
61802-P/F/I
61301
61803-P/F/I
61808(FPM)
61-875-P
61-010-F/I
61-872-P (NPT)
61808(FPM)
61802-P/F/I
61301
61803-P/F/I
61808(FPM)
61801-P/F/I
61807-P(NPT)

LIST OF PARTS DOSTEC-50 (Diaphragm)

CODE	DESCRIPTION	UNITS
28010	Electric motor 750w (1cv) 3ph T80 B14 230/400	1
28012	Electric motor 750w (1cv) 1ph 50hz T80 B14 high torque	1
60109	Regulator knob Dostec	1
60300	Oil peep hole	1
60301	Regulator knob plug	1
60314	O-ring 17x3,5 NBR	1
60315	O-ring 6,5x2 NBR	1
60333	Screw M4x8 DIN 913 A-2	1
61336	Drain plug ½	1
61337	Filler plug ½”	1
62129	Bellow FPM	1
62166	Screw M6x16 Din 912 A2	8
62352	Screw M6x12 Din 933 A2	4
62451	Bearing 6202 zz	1
63331	Screw M8x20 Din 912 A2	6
63332	Screw M8x90 Din 912 A2	6
64310	O-ring 55,5x3,5 NBR	1
66334	Nut M6 Din 934 A2	1
66344	Washer D6 Din 125 A2	5
71102	Block lid D50	1
71104	Eccentric shaft 10mm	1
71105	Eccentric shaft 15mm	1
71106	Ring gear 2 stroke D50	1
71107	Pinion 2 stroke D50	1
71111	Regulation rod p1,5mm D50	1
71112	Regulation rod p1 mm D50	1
71136	Ring gear 1 stroke D50	1
71137	Pinion 1 stroke D50	1
71138	Ring gear 2,4 stroke D50	1
71139	Pinion 2,4strokes D50	1
71155	Eccentric shaft 5 D50	1
71156	Eccentric shaft 7,5 D50	1
71212	Ring plate for diaphragm cylinder D142	1
71213	Ring plate for diaphragm cylinder D163	1
71214.1-P/F	Cylinder diaphragm ring plate D142	1
71215.1-P/F	Cylinder diaphragm ring plate D163	1
71217	Diaphragm flange D142	1
71218	Diaphragm flange D163	1
71221	Base membrana D142	1
71222	Base membrana D163	1
71225	Diaphragm D163	1
71226	Diaphragm D142	1
71303	Wedging piece Din 6885-a (8x7x25)	1
71304	Screw M6x10 Din 913 8.8	1
71306	O-ring 70 x 2,5 NBR	1
71307	O-ring 125x2,5 NBR	1
71308	O-ring 77 x 2 NBR	1

71309	Elastic washer Din137-b (34x26x0,4)	3
71310	Bearing 6304zz (20x52x15)	2
71311	Bearing 6308zz (40x90x23)	1
71313	washer M6 Nord-lock	4
71321	Screw M8x100 Din 912 A2	6

ASSEMBLIES

71-015	Block D50 p1.5mm assembly	1
71-016	Block D50 p1mm assembly	1
71-029	Regulator p 1mm D50 assembly	1
71-030	Regulator p 1,5 mm D50 assembly	1
71-032	Rod slider D50-D assembly	1

VALVES

61-010-F	Suction check valve 1 1/4 PVDF	1
61-011-F	Discharge check valve 1 1/4 PVDF	1
61-875-P	Suction check valve 1 1/4 PP Borosilicate	1
61-885-P	Discharge check valve 1 1/4 PP Borosilicate	1

MAINTENACE KIT (valves+diaphragm+bellow)

71-075-P	Maintenance kit Dostec-50 D142 PP
71-076-P	Maintenance kit Dostec-50 D163 PP

Materials code: -P= Polypropylene
-F= PVDF
-I= SS 316

MAINTENANCE

Before any maintenance operation we will check:

That the pump is stopped and disconnected from the electric supply.

There is no pressure neither inside the head nor in the impulsion pipe. It is advisable to empty the head before opening it.

The staff in charge of the maintenance will use the adequate protection means in order to manipulate the dosed liquid.

PERIÓDICAL MAINTENANCE:

Change oil after the first 500 hours. Next changes will be every 2000 hours (minimum once a year).

Check the piston every 3 months or 1000 hours.

Check the seals every 3 months or 1000 hours.

Check the diaphragm every 3 months or 1000 hours.

Check the bellows every 3 months or 1000 hours.

Check the suction filter once a month.

Check the valves every 3 months or 1000 hours.

It is advisable to clean periodically the injector, letting clean water flow through it (we can make it coincide with the emptying of the tank), to eliminate precipitated rests that can remain in the inner part of the cylinder or in suction / impulsion pipes.

If we are using highly corrosive liquids it is advisable to double the frequency of checkings.

PROBLEM	CAUSE	SOLUTION
MOTOR DOES NOT RUN	THERE IS NO VOLTAGE MOTOR PROTECTION HAS BLOWN UP	- Check with a voltimeter incoming voltage - Check with ammeter that current is not superior than nominal one
MOTOR RUNS HOT	A PHASE IS FAILING (three-phase); WRONG INCOMING VOLTAGE SUPERIOR CONSUMPTION THAN NOMINAL ONE LOW WORK FREQUENCY (only with inverter)	- Check with voltmeter tension in motor terminals - Check that incoming tension coincides with motor one (-10% / +10%) - Check that injection pressure is not superior to the one specified in the module - Check with a voltmeter incoming tension - Increase working frequency with inverter
MOTOR RUNS BUT PUMP DOES NOT INJECT OR INJECTION IS INFERIOR THAN NOMINAL ONE	PUMP HAS NOT BEEN PRIMED SUCTION / IMPULSION VALVES ARE DIRTY OR DAMAGED SUCTION FILTER IS DIRTY AIR COMES INTO SUCTION PIPE CAVITATION IN SUCTION	- Prime the pump injecting at zero pressure - Clean or change valves - Clean filter - Check sealing in connection points - Increase pipe diameter - Reduce sucion pipe length - Reduce speed through an inverter - Use a less viscous liquid
PUMP TRICKLES LIQUID THROUGH INFERIOR CYLINDER HOLE	DAMAGED SEALS DAMAGED PISTON	-· Change seals -.Change piston
PUMP TRICKLES OIL THROUGH INFERIOR CYLINDER HOLE	DAMAGED BELLOWS	- Change bellows
PUMP LEAKS OIL THROUGH REGULATOR	DAMAGED REGULATOR O’RINGS	- Change o’rings

EC CONFORMITY DECLARATION

I.T.C S.L..
Vallès, 26
Polígono Industrial Can Bernades-Subirà
08130 Santa Perpètua de Mogoda

*Declares that all models **DOSTEC** products, identified by a serial number and year of manufacture, strictly fulfill 2006/042/CE and low voltages directives D2006/95/CE, as long as installation, use and maintenance are carried out following the prevailing regulation and following the instructions contained in the handbook.*

Antón Planas
Manager

WARRANTY

ITC DOSING PUMPS

***I.T.C. S.L.** Warrants the product specified in this document for a period of 1 year from the purchase date. This warranty obligation is limited to the free replacement of the damaged parts due to any material or manufacture defect. This warranty does not include periodic maintenance and damage resulting from misuse.*

*The equipment must be sent to **I.T.C. S.L**. Service Center with prepaid transport charges, and will be sent back with transport charges for customer's account.*

The warranty document with sales date and shop stamp, or an invoice copy must be sent with the equipment.

MODEL
_____

SERIAL #
_____

Sales date and shop stamp

_____

Original manual

Ed:07/02/19 -AN

ITC
DOSING PUMPS

C/ Vallès, 26 Pol. Ind. Can Bernades - Subirà
P.O. Box 60
08130 Santa Perpètua de Mogoda
BARCELONA

Tel. 93 544 30 40 *Fax 93 544 31 61*
e-mail: itc@itc.es *www.itc-dosing-pumps.com*